VISIONCHART

Healthcare Glassboards™

Hygienic, easy-to-clean surfaces designed for busy healthcare environments.

VISIONCHART HEALTHCARE

Why Glassboards™ in Healthcare

- Non-porous surface to support hygienic environments
- Easy to clean for frequent use in high-traffic areas
- Clear, visible communication for busy healthcare teams

EDGE LX9

Integrated Wall

Flush-to-wall Glassboards™ for seamless integration

Lumiére

Wall-Mounted

Glassboards™ for daily planning and visibility

Lumiére Switch

Changeable

Updateable Glassboard™ for patient journey boards

Mobile Glassboards™

Mobile

Flexible Glassboards™ for communication anywhere

Treatment Planning
Daily Priorities
• Patient assessments
• Care plan updates
• Medication review
• Discharge planning
• Patient education
Rounds
• 08:00 Ward Rounds
• 11:00 Therapy Review
• 14:00 Care Team Huddle
• 15:30 Discharge Planning
Discharge Follow-up
• Confirm transport
• Medications ready
• Follow-up appointments
• Patient education
• Home support arranged
Staff Tasks
• Review care plans
• Update documentation
• Check equipment
• Bed status update
• Team huddle prep
Room Prep
Room | Status | Notes
101 | Ready | –
102 | Cleaning | –
103 | Ready | Isolation Ready
104 | Maintenance | Light repair
Notes
• Team meeting Fri 10:00
• Training: Manual Handling Wed 13:00
• Policy update next week
Patient Rooms 101 - 115
Treatment Rooms
Staff Lounge
Exit

LX9 Glassboard™ with Slim Edge Frame

Seamless, flush-to-wall Glassboards™ designed to support clean, integrated communication in healthcare environments. LX9 installs neatly alongside wall linings and acoustic panels, creating a continuous, easy-to-clean surface ideal for nurse stations and staff coordination areas. The non-porous glass surface supports hygienic environments and frequent cleaning.

25 YEAR

Why LX9 Glassboards™

Clean wall integration
Flush-to-wall design helps reduce gaps where dust and bacteria can collect

Built for clinical cleaning
Non-porous glass surface handles frequent cleaning

Clear team communication
Large, uninterrupted writing area keeps information visible

Long-term performance
25-year surface warranty. Wipes clean for life.

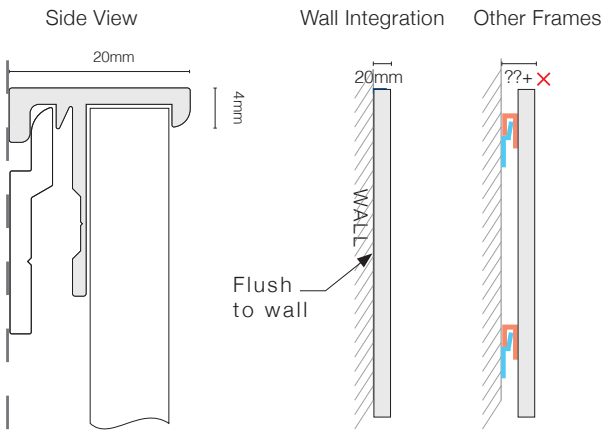

LX9 Glassboard™ with Slim Edge Frame

Code	Size (mm)	Availability
LX9-1290	1200 × 900	Made to Order
LX9-1512	1500 × 1200	Made to Order
LX9-1812	1800 × 1200	Made to Order
LX9-2412	2400 × 1200	Made to Order

Lumiere Brilliant White Glassboard™

Premium wall-mounted Glassboards™ designed for clear, reliable communication in healthcare environments. Lumiere provides a durable, easy-to-clean writing surface that maintains clarity under constant use. The non-porous glass surface supports hygienic environments and frequent cleaning.

50 YEAR

Why Lumiere Glassboards™

Clear daily communication
Clean, easy-to-read surface keeps information visible

Built for clinical cleaning
Non-porous glass surface handles frequent cleaning

Suitable for clinical spaces
Large, uninterrupted writing area keeps information visible

Long-term reliability
50-year surface warranty for consistent performance

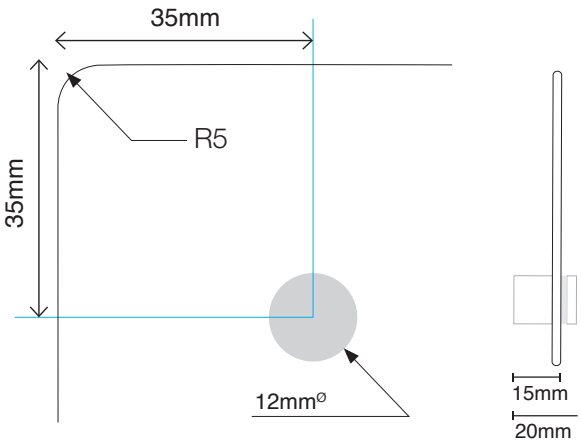

Lumiere Brilliant White Glassboard™

Code	Size (mm)	Availability
VGB9060	900 × 600	In Stock
VGB1290	1200 × 900	In Stock
VGB1212	1200 × 1200	In Stock
VGB1590	1500 × 900	In Stock
VGB1512	1500 × 1200	In Stock
VGB1812	1800 × 1200	In Stock
VGB2112	2100 × 1200	In Stock
VGB2412	2400 × 1200	In Stock

NEW

Lumiere Switch Glassboard™

Update patient information or signage without replacing the board. Lumiere Switch combines a clean, non-magnetic glass writing surface with a simple interchangeable graphic system, ideal for patient journey boards, treatment areas and staff communication.

2 YEAR

Why Lumiere Switch

Update without replacing boards
Change room details or information signage instantly

Ideal for patient communication
Perfect for patient journey, treatment info and compliance displays

Clean, protected presentation
Glass surface keeps content clear and easy to clean

Quick, simple updates
Slide-in system allows fast graphic changes

Side

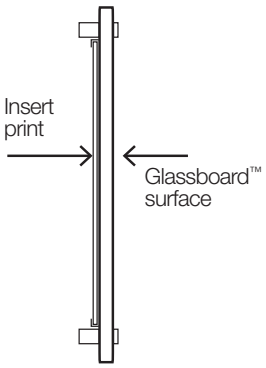

Printable Insert Area

Printable Insert Area

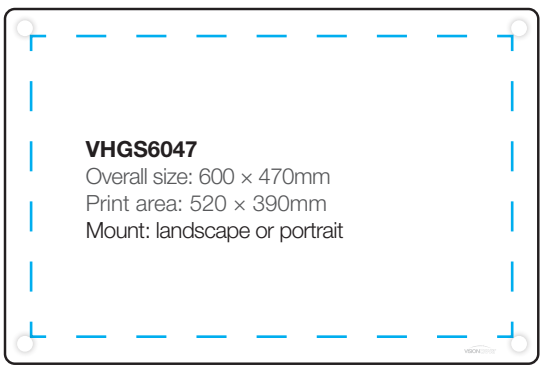

Lumiere Switch Glassboard™

Code	Size (mm)	Availability
VHGS4747	470 × 470	In Stock
VHGS6047	600 × 470	In Stock

Update Information Without Replacing the Board

Slide in any new background

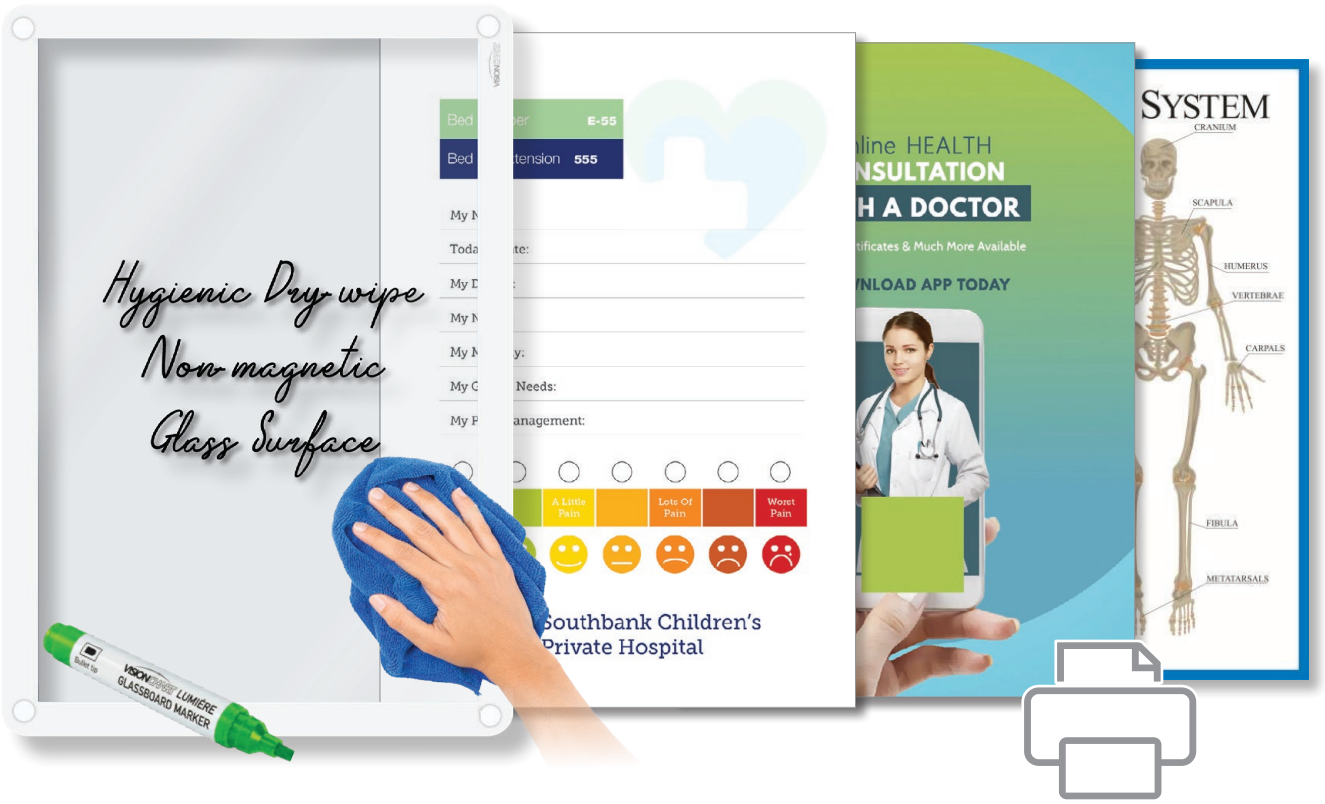

Write on the Glassboard™

Write on the Glassboard™ surface with any Glassboard™ or dry erase marker.

Simply wipe off

Writing wipes off easily with no ghosting, leaving the graphics untouched.

Print a new background

Simply print your own sign or graphic on paper and slide it under the frame.

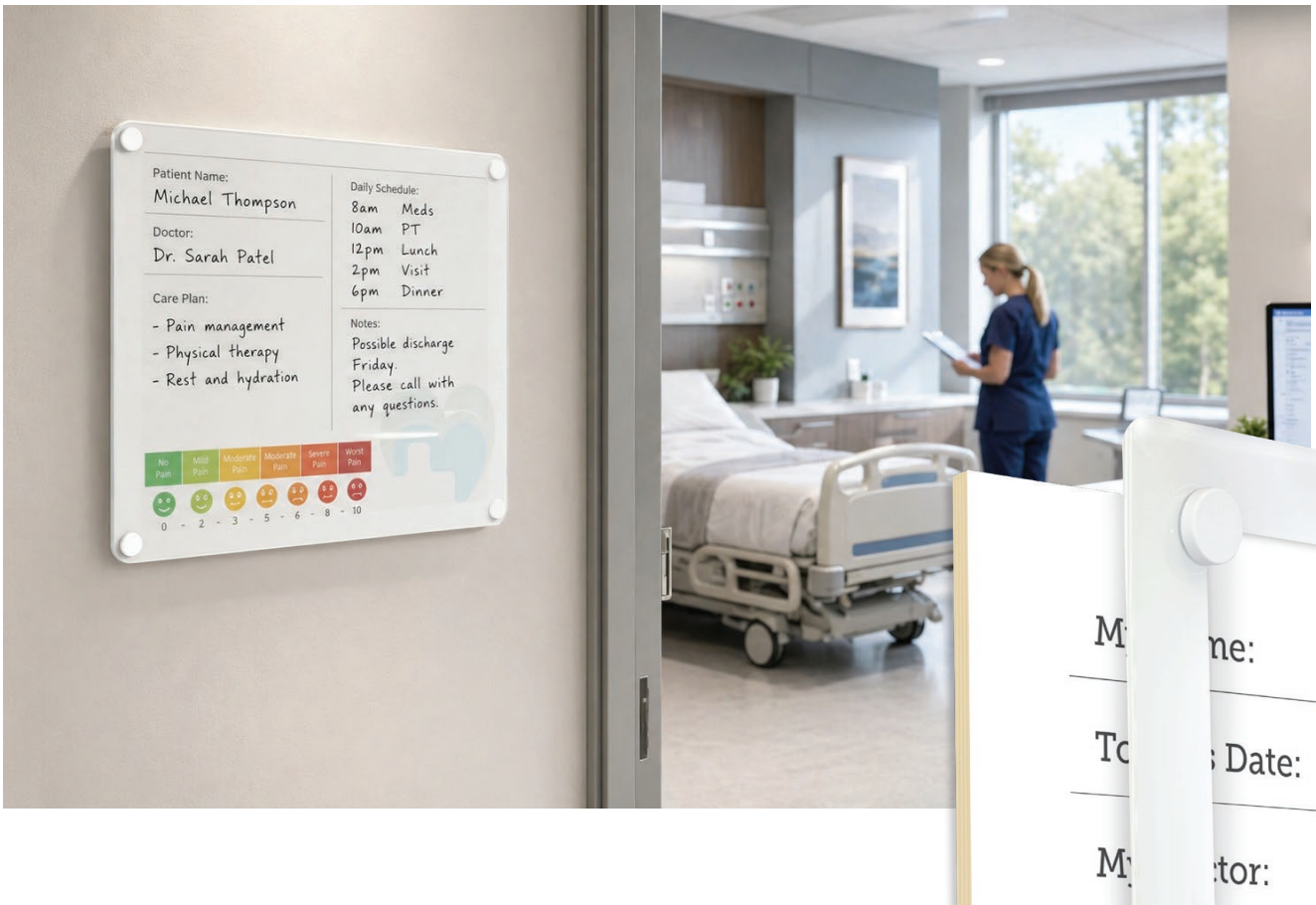

Space Mobile Double-Sided Glassboard™

Flexible mobile Glassboards™ for communication wherever it's needed. Space Mobile provides a double-sided writing surface that can be easily moved between rooms, ideal for team discussions, ward rounds and training environments. The non-porous glass surface supports hygienic environments and frequent cleaning.

25 YEAR

Why Space Mobile Glassboards™

Move communication anywhere
Easily reposition between rooms and teams

Double-sided writing space
More room for notes, plans and collaboration

Built for clinical environments
Durable glass surface supports frequent cleaning

Stable and secure
Heavy-duty industrial lockable castors for controlled movement

Space Mobile Glassboard™

Code	Size (mm)	Availability
SMW1290	1210 × 855	In Stock

Quiet Mobile Glassboard™

A mobile Glassboard™ solution that combines clear communication with improved acoustic comfort. Quiet Mobile features a glass writing surface on one side and acoustic backing on the other, helping reduce noise while supporting collaboration in shared healthcare environments.

2 YEAR

Why Quiet Mobile Glassboards™

Reduce noise in shared spaces
Acoustic backing helps improve room comfort

Support focused communication
Glass writing surface keeps information clear

Multi-functional surface
Write, display and pin information in one unit

Flexible and mobile
Store, stack and move easily between spaces

Quiet Mobile Glassboard™

Code	Size (mm)	Availability
QYT1790	1700 × 900	In Stock

Glassnote Desktop Glassboard™

A compact desktop Glassboard™ designed for quick, visible note-taking in busy healthcare environments. Glassnote keeps essential reminders, messages and updates within reach, while maintaining a clean and organised workspace.

2 YEAR

Why Glassnote Desktop Glassboards™

Keep notes visible and accessible
Perfect for quick reminders and daily tasks

Supports clean workspaces
Non-porous glass surface wipes clean and helps reduce reliance on sticky notes

Built-in storage for essentials
Holds markers and small accessories neatly

Compact and stable design
Sits securely on desks without clutter

Glassnote Desktop Glassboard™

Code	Size (mm)	Availability
VDG001	230 × 203 × 113	In Stock

Glassboard™ Accessories

Glassboard™ accessories designed to write, clean and organise with confidence. Visionchart's range includes markers, erasers, cleaning spray, pen cups and super strong magnets specifically made for use with magnetic Glassboards™. Standard magnets are not suitable for glass surfaces — always use super strong glassboard magnets to ensure reliable hold and everyday performance.

Glassboard™ Starter Kit:

- 6 X dry erase Glassboard™ bullet markers
- Strong magnetic eraser with replaceable fabric
- Strong magnetic pen cup
- 237ml board cleaning spray

Glassboard™ Markers with Bullet:

- Quality German ink with smooth Japanese bullet nib
- Bold colours: black, blue, red, green, orange, purple
- Pack of 6 for colour-coded clarity and versatility

Super Strong Magnetic Pen Cup:

- Super Strong magnetic backing for Glassboards™
- Bevel-shaped cup holds pens, markers and erasers
- Dimensions: 87mm W × 57mm D × 88mm H

Super Strength Magnets:

- Super strong magnets for magnetic Glassboards™
- Button magnets: pack of 5, 30mm diameter, provides reliable hold
- Skittle magnets: pack of 18 in 6 colours

Premium Whiteboard and Glassboard™ Starter Kits

Code	Type	Availability
VA800-G	Glassboard	In Stock

Glassboard™ Markers with Bullet Tip

Code	Pack	Availability
VA802	6	In Stock

Super Strong Magnetic Pen and Eraser Caddy

Code	Size (mm)	Availability
VA804	87(W) × 57(D) × 88(H)	In Stock

Super Strength Magnetic Buttons 30mm Pack 5

Code	Size (mm)	Availability
X-MGP3010W	30	In Stock

Super Strength Magnetic Skittles Pack of 18

Code	Size (mm)	Availability
VA0019		In Stock

Healthcare Glassboards™

Hygienic, easy-to-clean surfaces designed for busy healthcare environments.

NSW Head Office
5 Liberty Rd
Huntingwood
NSW 2148

QLD
17 Moonbi Street
Brendale
QLD 4500

VIC
8 Lara Way
Campbellfield
VIC 3061

WA
47 Abbott Road
Perth Airport
WA 6105

NZ
49 Station Rd
Papatoetoe, Auckland
NZ 2025

Office: **(02) 9725 3177** Orders: **orders@visionchart.com.au** Web: **www.visionchart.com.au**